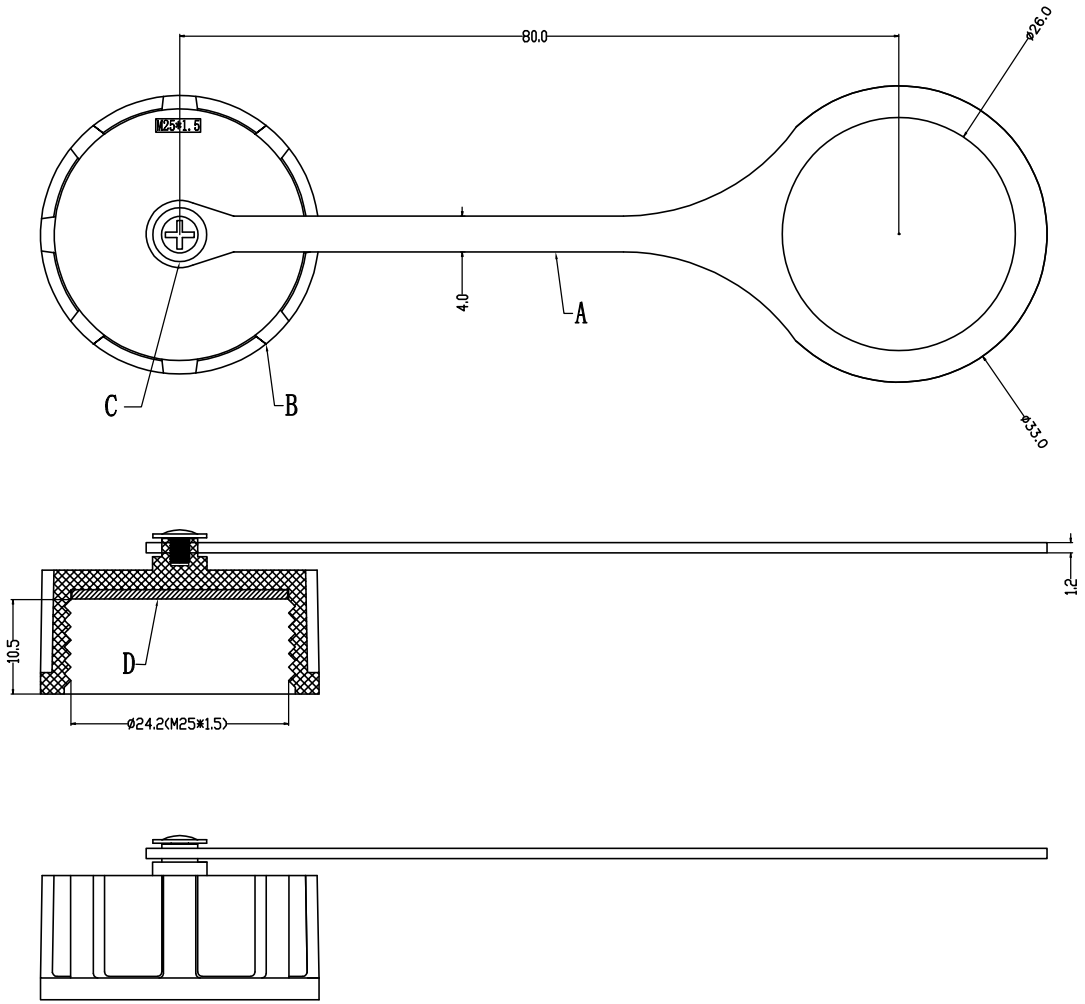

Engagement force		Rated volage	
Disengagement force		Rated current	
Mechanical lifespan		Insulation resistance	
IP rating	IP65/IP67	Contact resistance	
Flammability	UL94 V-0	Operation Temperature	-25° C~105° C

	PARTS	MATERIALS	TREATMENT	AMOUNT
A	CHAIN	PVC	BLACK	1
B	NUT	PA66+GF	BLACK	1
C	NUT	SPCE-SD	NICKL PLATED	1
D	O-RING	EPDM	BLACK	1
E				

Dongguan Changjun ElectronicsCo.,LTD
东莞市昌骏电子有限公司

TOLERANCE
.xxx ±0.05
.xx ±0.10
.x ±0.30
x ±0.50
ANGLE ± 1°

TITLE: M25防尘盖螺母+链条

PART NO:	DRAWING NO.:
CJ-M25FCG-F01	CP-M25A002

SHEET:	SCALE:	UNIT:	SIZE:	REV
1 / 1	1 : 1	mm	A4	A/0

DRAWN:	CHECK:	DATE:
Xie Wenjun	Long Jichang	2023-06-21