由 Autodesk 教育版产品制作

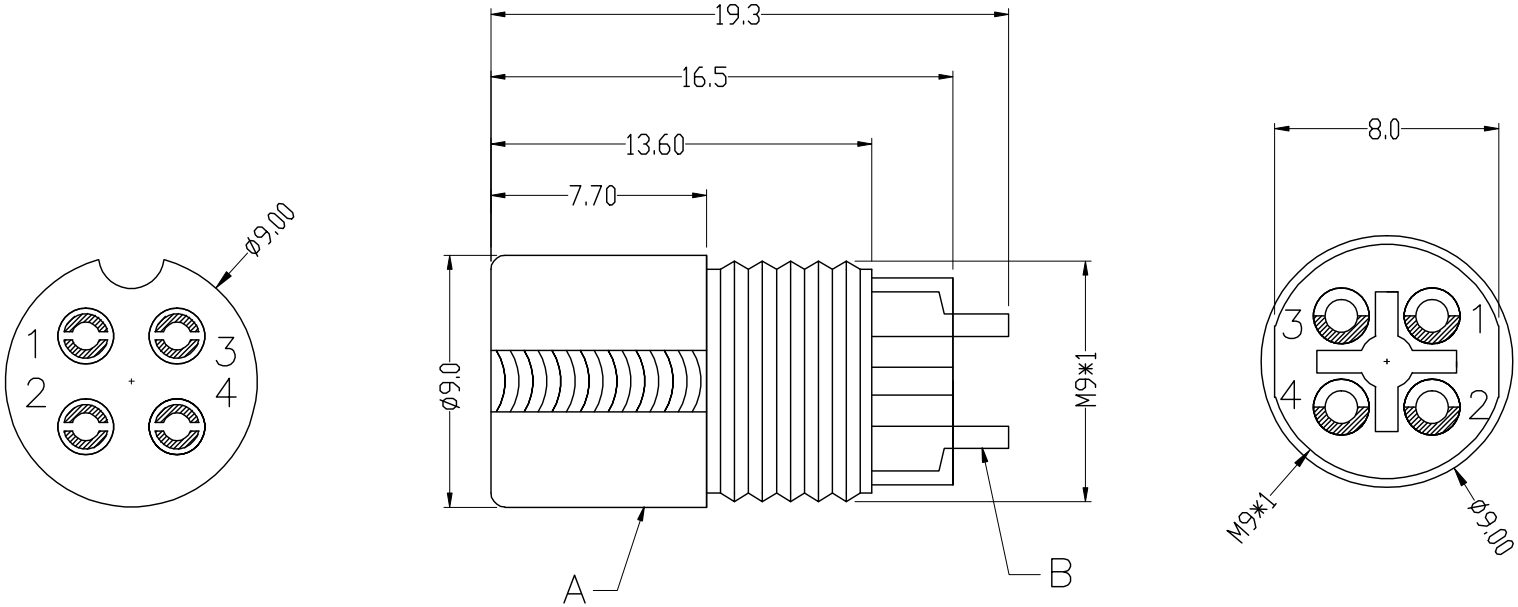

	PARTS	MATERIALS	TREATMENT	AMOUNT
A	HOUSING	PBT+GF	BLACK	1
B	CONTACT	BRONZE	SILVER PLATED	4
C				
D				
E				
F				

Engagement force	≤50N	Rated volage	60V
Disengagement force	≥10N	Rated current	6A
Mechanical lifespan	≥500	Insulation resistance	≥1000MΩ
IP rating	IP65/IP67	Contact resistance	≤10mΩ
Flammability	UL94 V-0	Operation Temperature	-40° C~105° C

东莞市昌骏电子有限公司

TOLERANCE
.xxx ±0.05
.xx ±0.10
.x ±0.30
x ±0.50
ANGLE ± 1°

TITLE: GX12航空4P线端母头主体7.7L

PART NO: CJ-GX12AM4-P01

DRAWING NO.: CP-GX120010

SHEET:	SCALE:	UNIT:	SIZE:	REV
1 / 1	1 : 1	mm	A4	A/0

DRAWN:	CHECK:	DATE:
Xie Wenjun	Long Jichang	2022-01-05

由 Autodesk 教育版产品制作