	3pin	4pin	5pin	6pin
图形	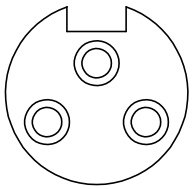	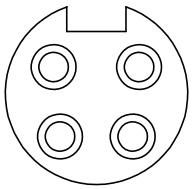	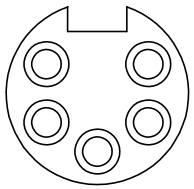	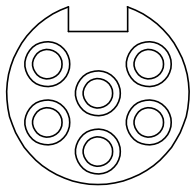

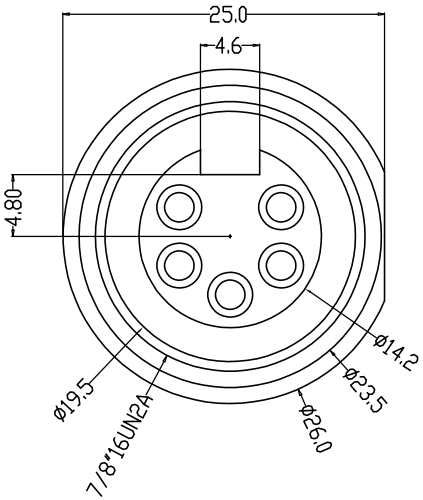

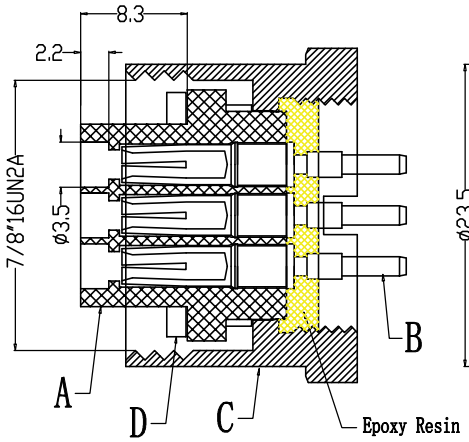

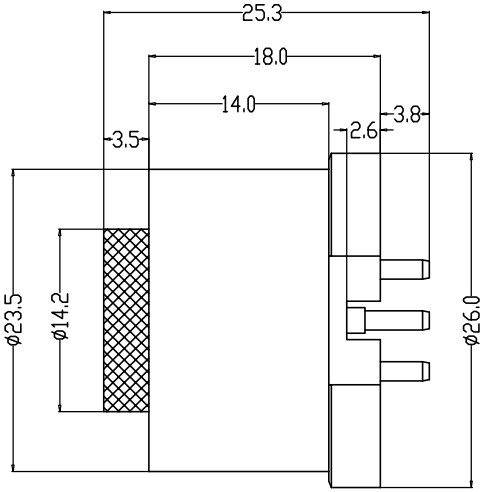

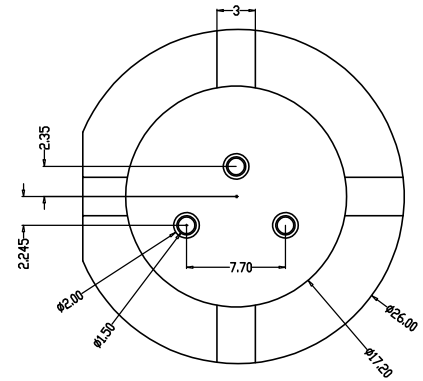

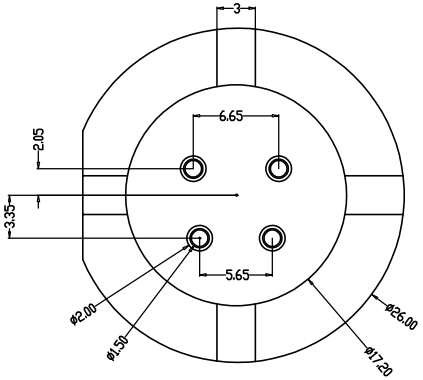

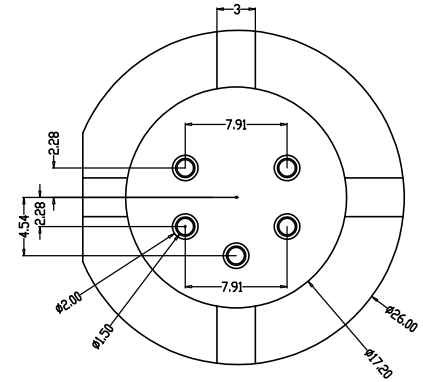

Engagement force	≤60N	Rated volage	250V
Disengagement force	≥20N	Rated current	20A
Mechanical lifespan	≥500	Insulation resistance	≥1000M Ω
IP rating	IP67/IP68	Contact resistance	≤20m Ω
Flammability	UL94 V-0	Operation Temperature	-40° C~105° C

	PARTS	MATERIALS	TREATMENT	AMOUNT
A	HOUSING	PA66+GF	SPECIFY COLOR	1
B	CONTACT	BRASS	GOLD PLATED	3~6
C	OUTER CONTACT	BRASS	NICKL PLATED	1
D	O-RING	EPDM	WHITE	1+1
E				
F				

Dongguan Changjun ElectronicsCo.,LTD
东莞市昌骏电子有限公司

TOLERANCE
.xxx ±0.05
.xx ±0.10
.x ±0.30
x ±0.50
ANGLE ± 1°

TITLE: 7/8-16UNZA防水3~6P板端母头 F26T-25.3L

PART NO: CJ-M23DBX(3~5)-F11-F26T-25.3L

DRAWING NO.: CP-M230011

SHEET:	SCALE:	UNIT:	SIZE:	REV
1 / 1	1 : 1	mm	A4	A/0

DRAWN:	CHECK:	DATE:
Xie Wenjun	Long Jichang	2022-12-16