	3pin	4pin	5pin	6pin
图形	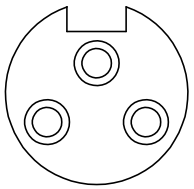	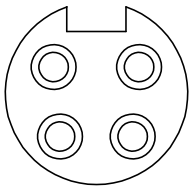	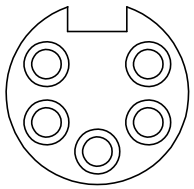	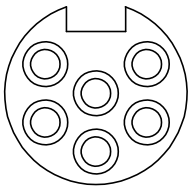

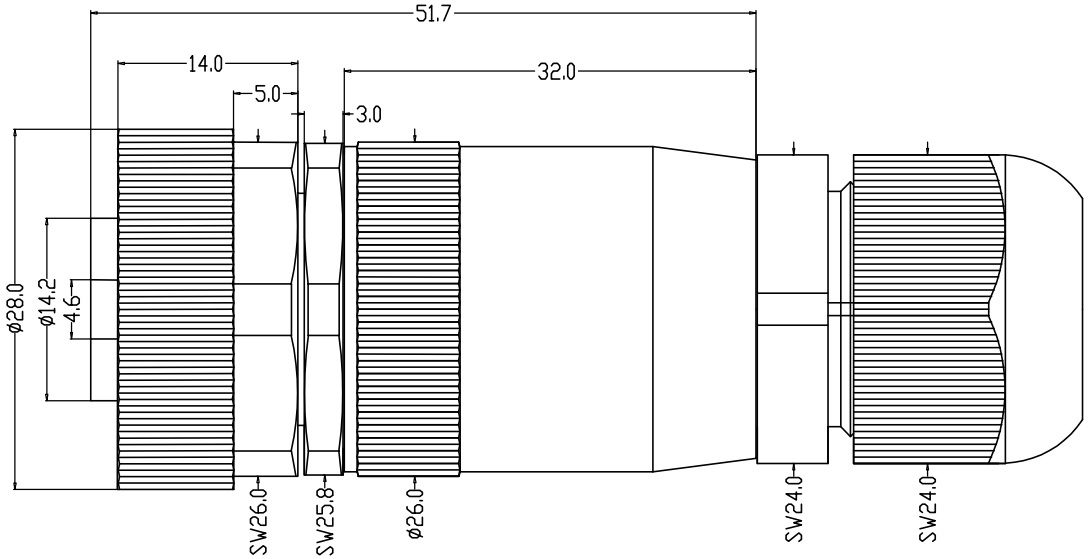

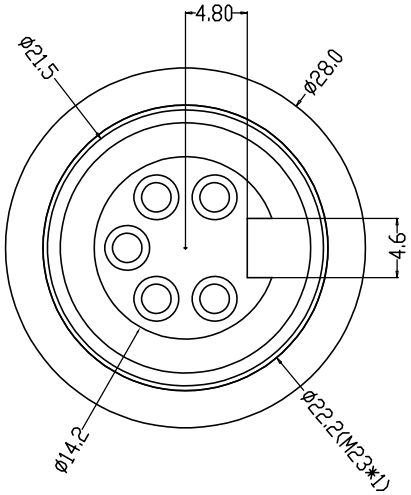

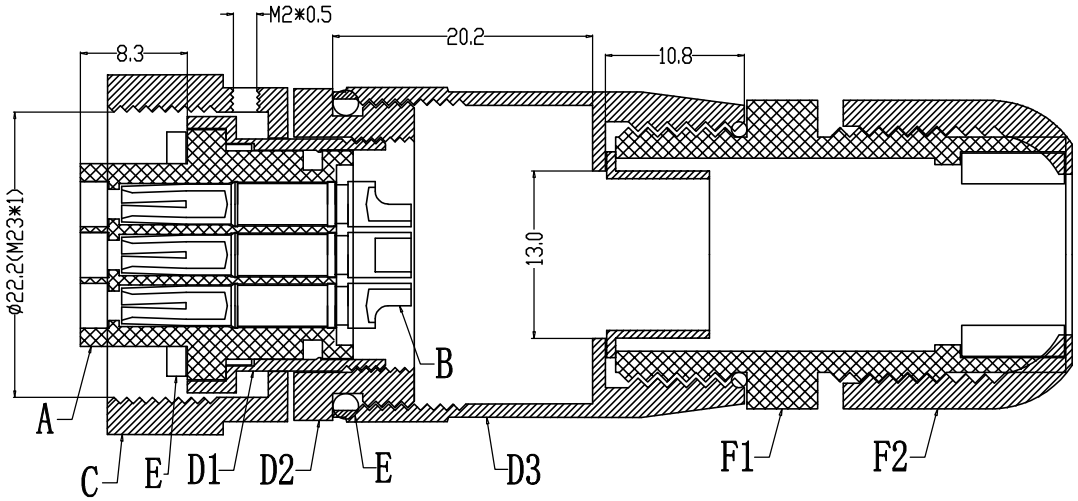

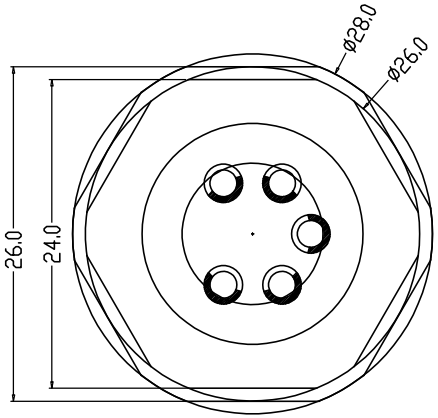

Engagement force	≤60N	Rated volage	250V
Disengagement force	≥20N	Rated current	20A
Mechanical lifespan	≥500	Insulation resistance	≥1000M Ω
IP rating	IP67/IP68	Contact resistance	≤20m Ω
Flammability	UL94 V-0	Operation Temperature	-40° C~105° C

	PARTS	MATERIALS	TREATMENT	AMOUNT
A	HOUSING	PA66+GF	SPECIFY COLOR	1
B	CONTACT	BRASS	GOLD PLATED	3~6
C	NUT	BRASS	NICKL PLATED	1
D	OUTER CONTACT	BRASS	NICKL PLATED	1+1+1
E	O-RING	EPDM	WHITE/ BLACK	1+1+1
F	NUT	PA66+GF	SPECIFY COLOR	1+1

Dongguan Changjun ElectronicsCo.,LTD
东莞市昌骏电子有限公司

TOLERANCE
.xxx ±0.05
.xx ±0.10
.x ±0.30
x ±0.50
ANGLE ± 1°

TITLE: 7/8-16UNZA防水3~6P线端母头(M23五金组装式)

PART NO:	DRAWING NO.:			
CJ-M23AXB(3~6)-F11	CP-M230021			
SHEET: 1 / 1	SCALE: 1 : 1	UNIT: mm	SIZE: A4	REV A/0
DRAWN: Xie Wenjun	CHECK: Long Jichang	DATE: 2023-09-14		