	3pin	4pin	5pin	6pin
图形	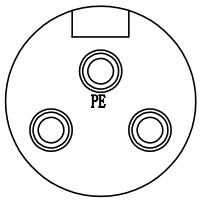	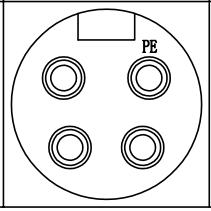	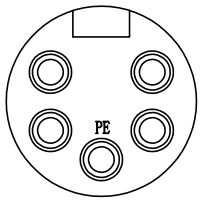	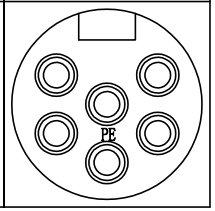

Recommended Panel Cut-out

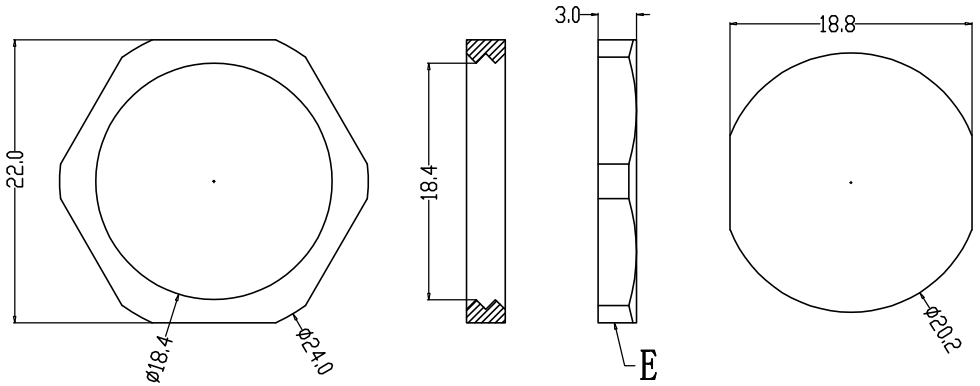

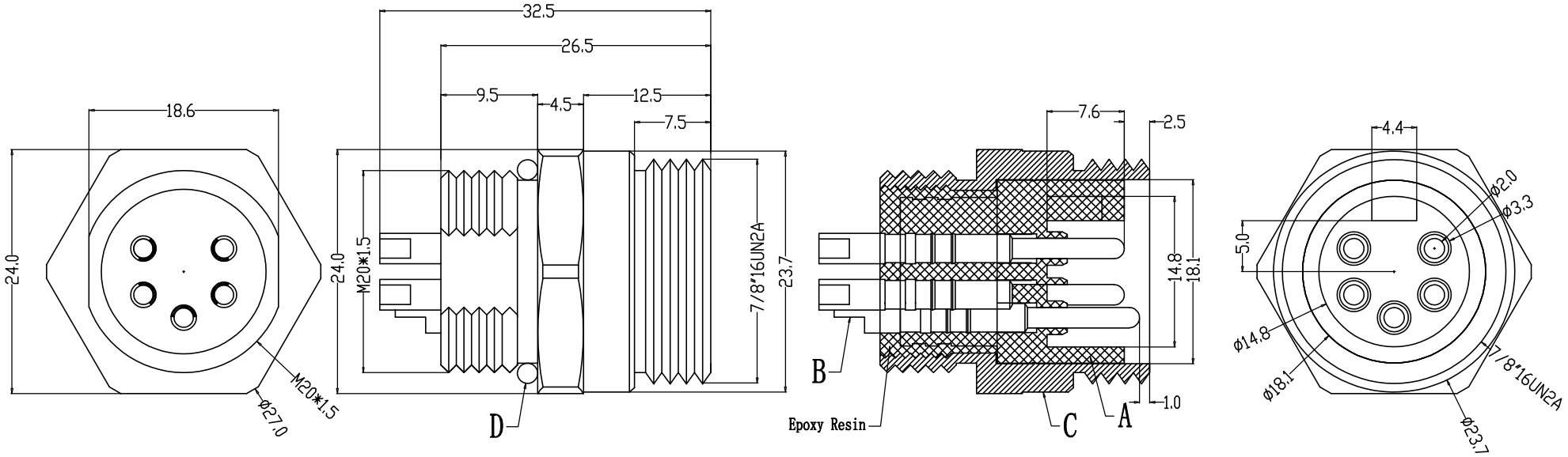

Engagement force	≤60N	Rated volage	250V
Disengagement force	≥20N	Rated current	20A
Mechanical lifespan	≥500	Insulation resistance	≥1000M Ω
IP rating	IP67/IP68	Contact resistance	≤20m Ω
Flammability	UL94 V-0	Operation Temperature	-40° C~105° C

	PARTS	MATERIALS	TREATMENT	AMOUNT
A	HOUSING	PA66+GF	SPECIFY COLOR	1
B	CONTACT	BRASS	GOLD PLATED	3~6
C	OUTER CONTACT	BRASS	NICKL PLATED	1
D	O-RING	EPDM	BLACK	1
E	NUT	BRASS	NICKL PLATED	1
F				

Dongguan Changjun ElectronicsCo.,LTD
东莞市昌骏电子有限公司

TOLERANCE
.xxx ±0.05
.xx ±0.10
.x ±0.30
x ±0.50
ANGLE ± 1°

TITLE: 7/8-16UN2A防水3~6P线端公头 后锁面板式M20 SW24T

PART NO: CJ-M23AXX(3~6)-M01H-M20SW24T

DRAWING NO.: CP-M230006

SHEET: 1 / 1 | SCALE: 1 : 1 | UNIT: mm | SIZE: A4 | REV A/0

DRAWN: Xie Wenjun | CHECK: Long Jichang | DATE: 2022-11-11