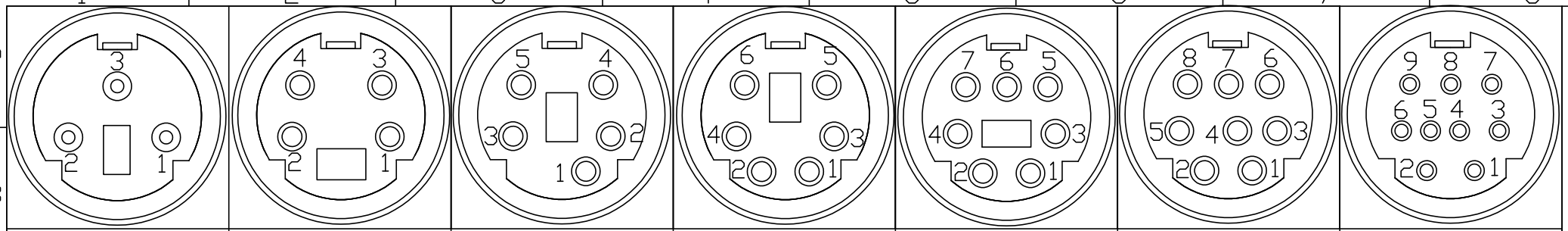

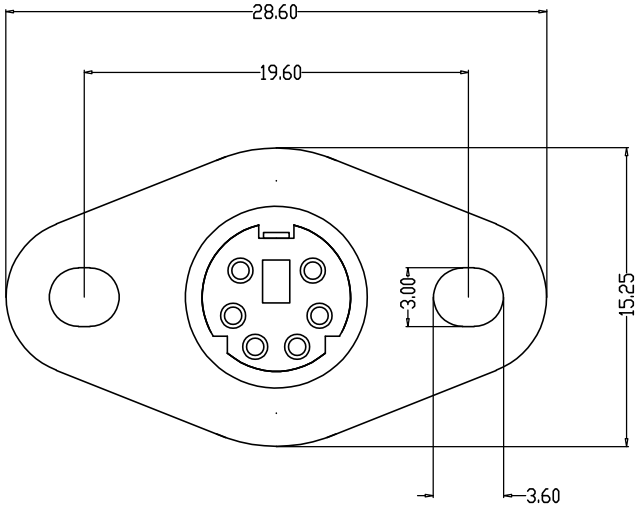

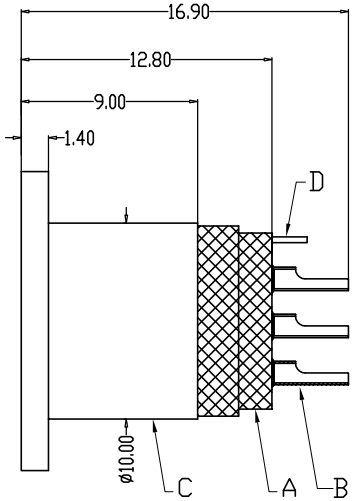

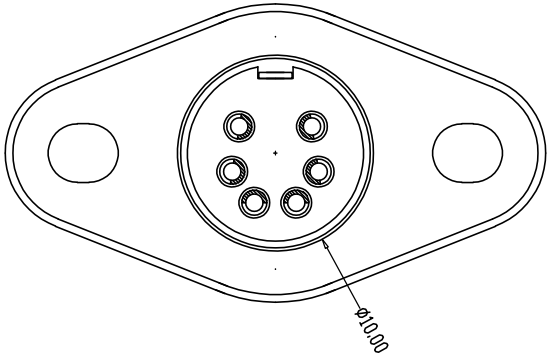

Engagement force	≤40N	Rated volage	24V
Disengagement force	≥10N	Rated current	2A
Mechanical lifespan	≥2000	Insulation resistance	≥1000M Ω
IP rating		Contact resistance	≤10m Ω
Flammability	UL94 V-0	Operation Temperature	-25° C~85° C

	PARTS	MATERIALS	TREATMENT	AMOUNT
A	HOUSING	PBT+GF	BLACK	1
B	CONTACT	BRASS	NICKL PLATED GOLD PLATED	3~9
C	OUTER CONTACT	BRASS	BRIGHT TIN PLATED GOLD PLATED	1
D	GROUND WIRE	BRONZE	NICKL PLATED	1
E				
F				

Dongguan Changjun Electronics Co.,Ltd
东莞市昌骏电子有限公司

TOLERANCE
.xxx ±0.05
.xx ±0.10
.x ±0.30
x ±0.50
ANGLE ± 1°

TITLE: mini DIN 3~9P菱形母座（铜壳）

PART NO: CJ-MD(3~9)-F42
DRAWING NO.: CP-MD0021
SHEET: 1 / 1
SCALE: 1 : 1
UNIT: mm
SIZE: A4
REV A/0
DRAWN: Xie Wenjun
CHECK: Long Jichang
DATE: 2022-01-05