PIN位	2PIN	3PIN4改3	4PIN	5PIN正方形	6PIN	7PIN	8PIN
A-CODE 图 形							
B-CODE 图 形							
D-CODE 图 形							

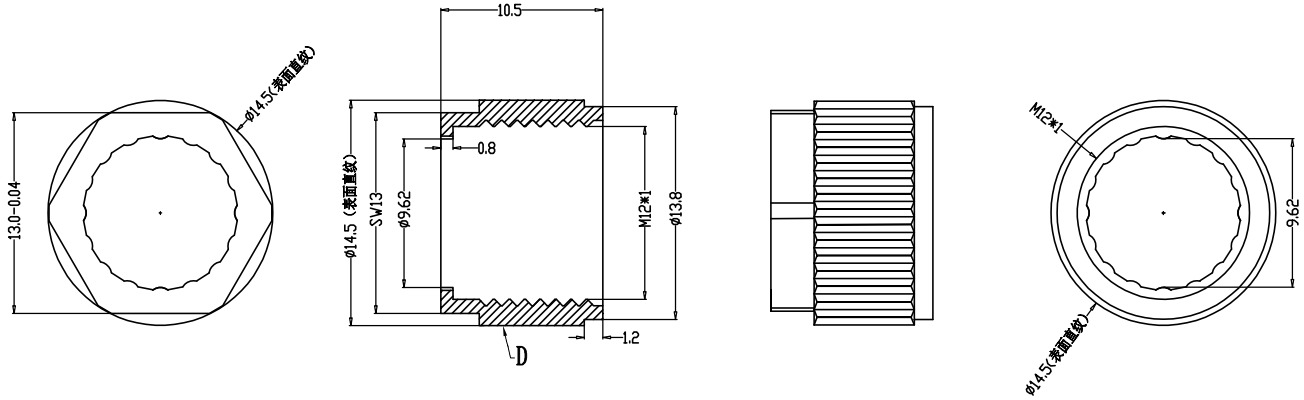

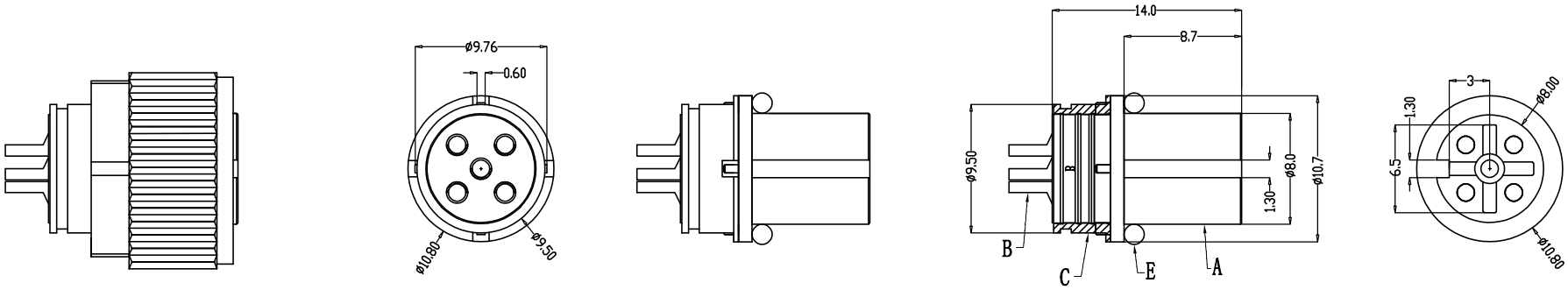

Engagement force	≤50N	Rated volage	2-5pin:60V 6-8pin:30V
Disengagement force	≥5N	Rated current	2-5pin:4A 6-8pin:2A
Mechanical lifespan	≥500	Insulation resistance	≥1000M Ω
IP rating	IP67/IP68	Contact resistance	≤10m Ω
Flammability	UL94 V-0	Operation Temperature	-40° C~105° C

	PARTS	MATERIALS	TREATMENT	AMOUNT
A	HOUSING	PA66+GF	SPECIFY COLOR	1
B	CONTACT	BRONZE	GOLD PLATED	2~8
C	OUTER CONTACT	BRASS	NICKL PLATED	1
D	NUT	BRASS	NICKL PLATED	1
E	O-RING	EPDM	SPECIFY COLOR	1
F				

Dongguan Changjun ElectronicsCo.,LTD

东莞市昌骏电子有限公司

TOLERANCE
.xxx ±0.05
.xx ±0.10
.x ±0.30
x ±0.50
ANGLE ± 1°

TITLE: M12防水2~8P线端母头D-屏蔽款14L+10.5L防振动螺母

PART NO:	DRAWING NO.:			
CJ-M12D(2~8)A-F15	CP-M120440			
SHEET: 1 / 1	SCALE: 1 : 1	UNIT: mm	SIZE: A4	REV A/0
DRAWN: Xie Wenjun	CHECK: Long Jichang	DATE: 2024-06-04		