| PIN数 | 4pin | 5pin | 6pin | 7pin |
|---|---|---|---|---|
| 图形 | 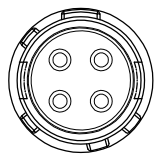 | 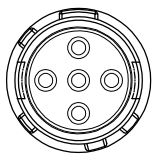 | 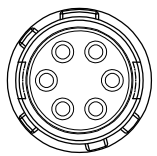 | 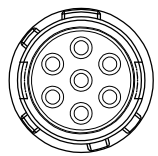 |

# Recommended Panel Cut-out

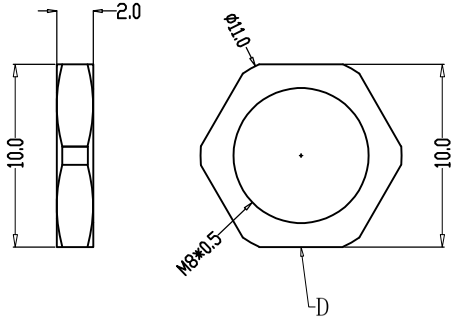


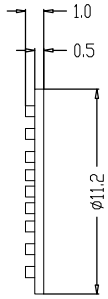


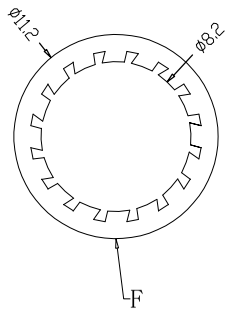


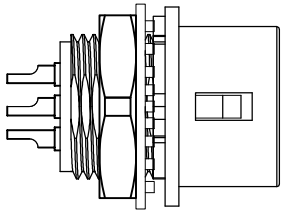

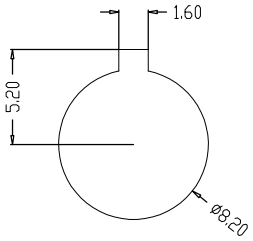


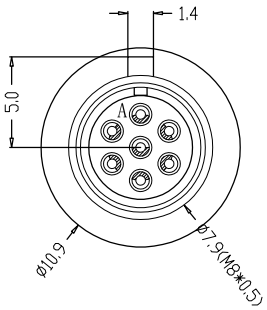


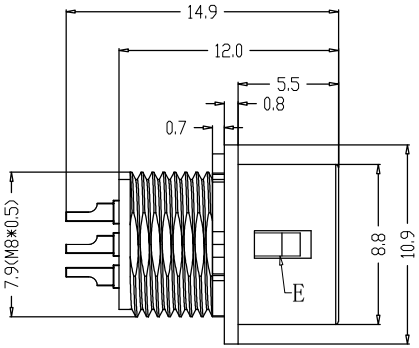


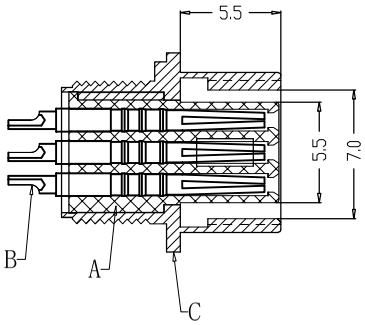


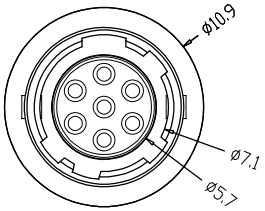


| | PARTS | MATERIALS | TREATMENT | AMOUNT |
|---|---|---|---|---|
| A | HOUSING | PA66+GF | BLACK | 1 |
| B | CONTACT | BRONZE | GOLD PLATED | 4~7 |
| C | SHELL | ZINC ALLOY | NICKL PLATED | 1 |
| D | NUT | BRASS | NICKL PLATED | 1 |
| E | SNAP FASTENER | BRASS | NICKL PLATED | 1 |
| F | ANTI-SLIP WASHER | SPCE-SD | NICKL PLATED | 1 |
| G | | | | |

| | | | |
|---|---|---|---|
| Engagement force | ≤20N | Rated volage | AC:100V DC:140V |
| Disengagement force | ≥5N | Rated current | 2A |
| Mechanical lifespan | ≥1000 | Insulation resistance | ≥1000MΩ |
| IP rating | IP65 | Contact resistance | ≤10mΩ |
| Flammability | UL94 V-0 | Operation Temperature | -25° C~85° C |

Dongguan Changjun Electronics Co.,Ltd
东莞市昌骏电子有限公司

TOLERANCE
.xxx ±0.05
.xx ±0.10
.x ±0.30
x ±0.50
ANGLE ± 1°

TITLE: 推拉自锁HR10A线端母头 后锁面板式M8 F11T

| PART NO: | DRAWING NO.: | | | |
|---|---|---|---|---|
| CJ-HR10A(4~7)-F01H-M8F11T | CP-HR10A0004 | | | |
| SHEET: 1 / 1 | SCALE: 1 : 1 | UNIT: mm | SIZE: A4 | REV A/0 |
| DRAWN: Xie Wenjun | CHECK: Long Jichang | DATE: 2026-05-29 | | |