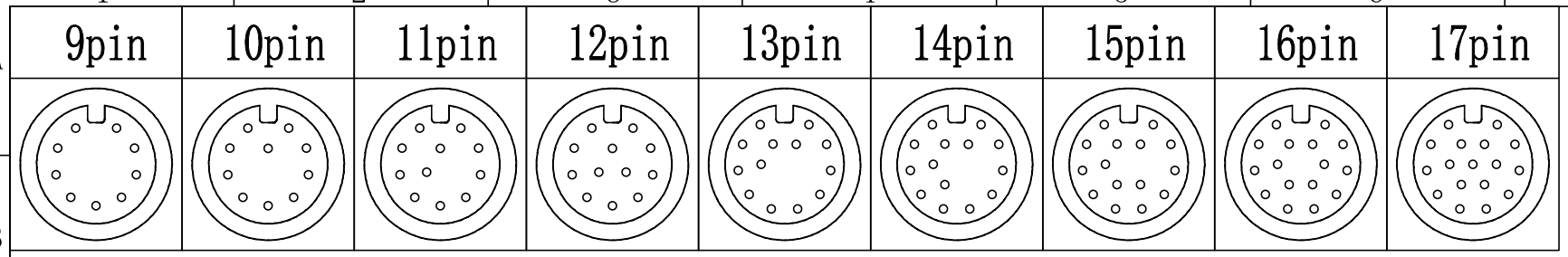

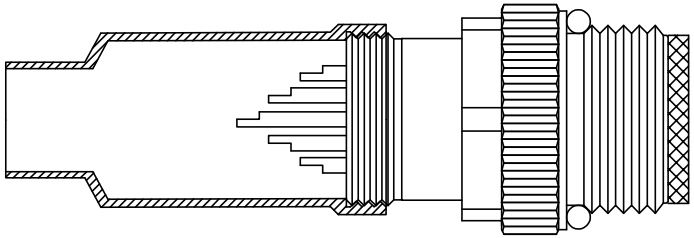

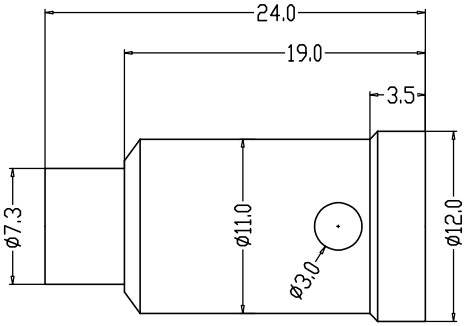

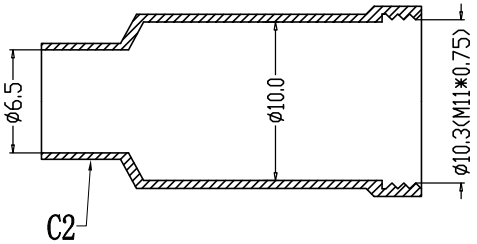

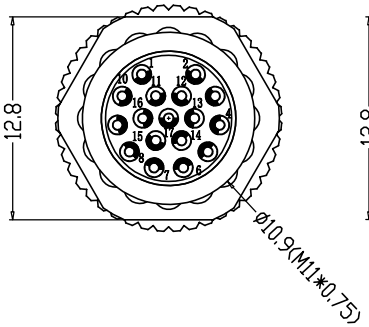

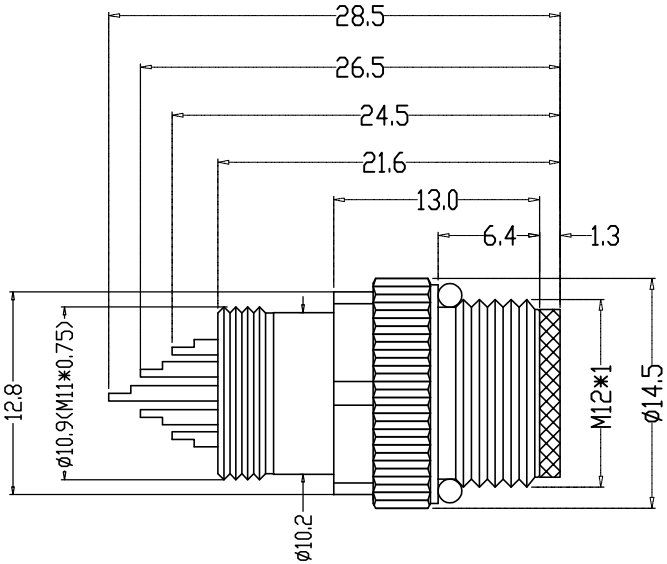

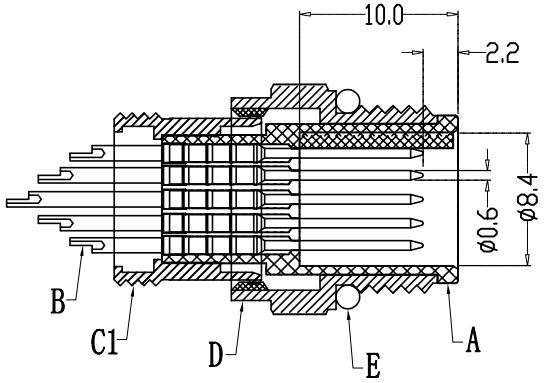

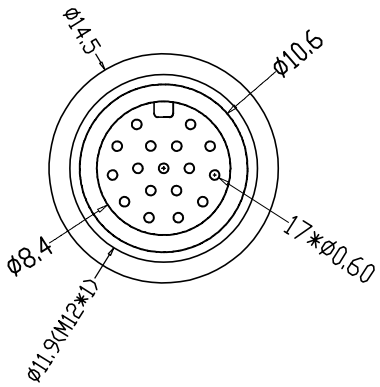

Engagement force	≤50N	Rated volage	30V
Disengagement force	≥10N	Rated current	1.5A
Mechanical lifespan	≥500	Insulation resistance	≥1000M Ω
IP rating	IP67/IP68	Contact resistance	≤10m Ω
Flammability	UL94 V-0	Operation Temperature	-40° C~105° C

	PARTS	MATERIALS	TREATMENT	AMOUNT
A	HOUSING	PA66+GF	SPECIFY COLOR	1
B	CONTACT	BRASS	GOLD PLATED	9~17
C	SHIELD	BRASS	NICKL PLATED	1+1
D	NUT	BRASS	NICKL PLATED	1
E	O-RING	SILICA GEL	BLACK	1
F				

Dongguan Changjun ElectronicsCo.,LTD
东莞市昌骏电子有限公司

TOLERANCE
.xxx ±0.05
.xx ±0.10
.x ±0.30
x ±0.50
ANGLE ± 1°

TITLE: M12防水9~17P线端公头防振动屏蔽款+13L六角直纹螺丝+24L屏蔽尾管

PART NO: CJ-M12C(9~17)A-M82		DRAWING NO.: CP-M120599		
SHEET: 1 / 1	SCALE: 1 : 1	UNIT: mm	SIZE: A4	REV A/0
DRAWN: Xie Wenjun	CHECK: Long Jichang	DATE: 2025-10-28		