PIN数	2p偏心款	2p居中款	4改2	3pin	4改3	4pin	2+2	2+4
图形	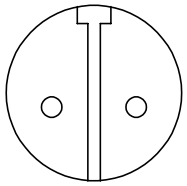	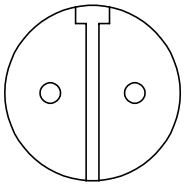	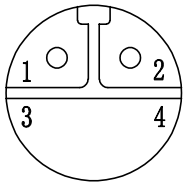	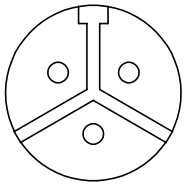	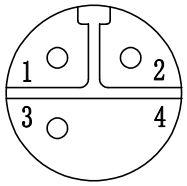	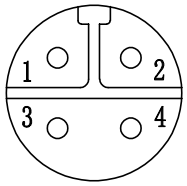	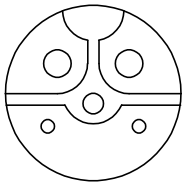	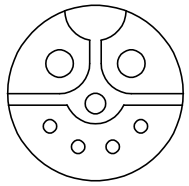
接触直径	1.50mm	1.50mm	1.50mm	1.50mm	1.50mm	1.50mm	2.00mm+1.00mm	2.00mm+1.00mm

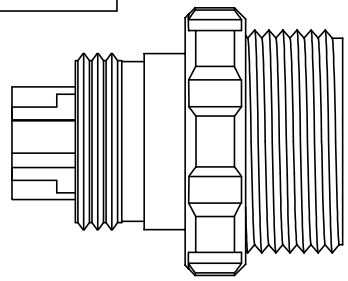

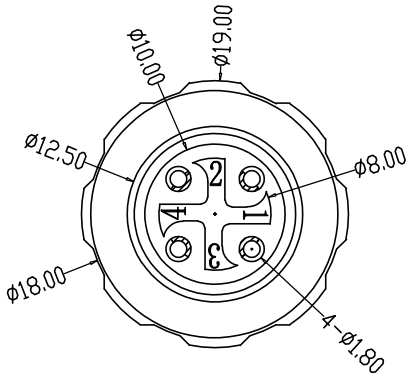

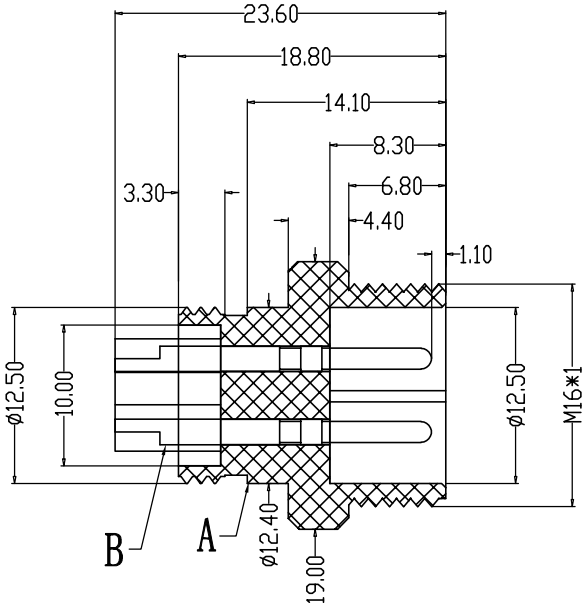

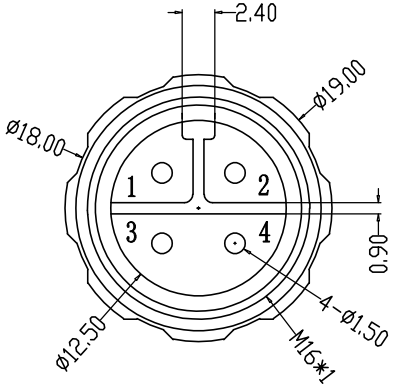

					PARTS	MATERIALS	TREATMENT	AMOUNT
				A	HOUSING	PA66+GF	SPECIFY COLOR	1
Engagement force	≤30N	Rated volage	60V	B	CONTACT	BRASS	GOLD PLATED	2~6
Disengagement force	≥10N	Rated current	1.5针-7.5A 2.0针-20A	C				
Mechanical lifespan	≥500	Insulation resistance	≥1000MΩ	D				
IP rating	IP67	Contact resistance	≤10mΩ	E				
Flammability	UL94 V-0	Operation Temperature	-25° C~105°	CF				

Dongguan Changjun ElectronicsCo.,LTD
东莞市昌骏电子有限公司

TOLERANCE
.xxx ±0.05
.xx ±0.10
.x ±0.30
x ±0.50
ANGLE ± 1°

TITLE: M16防水线端公头Z款

PART NO:	DRAWING NO.:			
CJ-M16ZXB(2~6)-M01	CP-M16Z002			
SHEET: 1 / 1	SCALE: 1 : 1	UNIT: mm	SIZE: A4	REV A/0
DRAWN: Xie Wenjun	CHECK: Long Jichang	DATE: 2022-01-05		