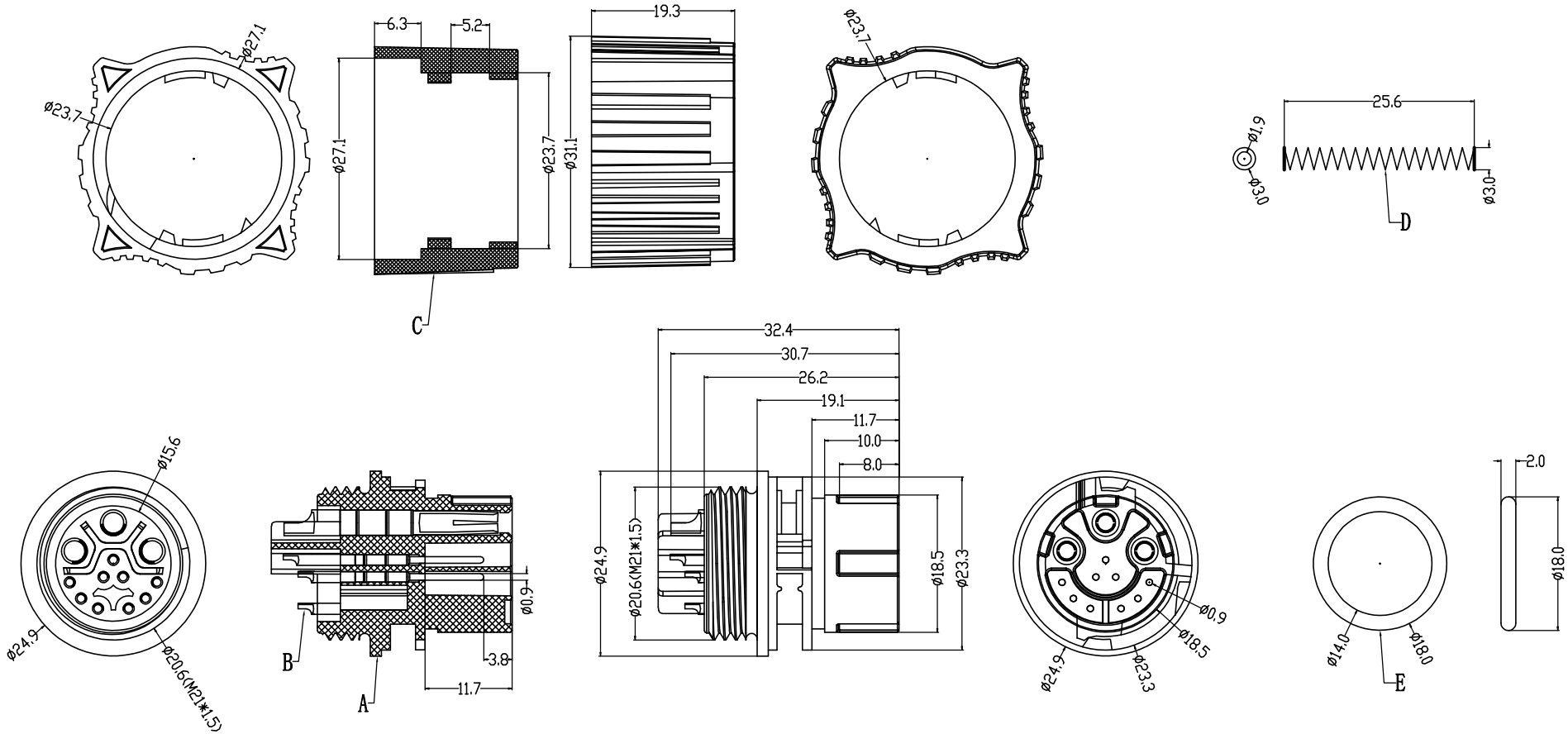

Engagement force	≤80N	Rated volage	220V
Disengagement force	≥20N	Rated current	20A
Mechanical lifespan	≥500	Insulation resistance	≥1000M Ω
IP rating	IP67	Contact resistance	≤10m Ω
Flammability	UL94 V-0	Operation Temperature	-25° C~105° C

	PARTS	MATERIALS	TREATMENT	AMOUNT
A	HOUSING	PA66+GF	BLACK	1
B	CONTACT	BRASS	NICKL PLATED GOLD PLATED	3+9
C	NUT	PA66+GF	BLACK	1
D	SPRING	SS	NICKL PLATED	1
E	O-RING	SILICA GEL	WHITE	1
F				

Dongguan Changjun ElectronicsCo.,LTD
东莞市昌骏电子有限公司

TOLERANCE
.xxx ±0.05
.xx ±0.10
.x ±0.30
x ±0.50
ANGLE ± 1°

TITLE: 23型推拉自锁3+9线端母头

PART NO:	DRAWING NO.:			
CJ-ZS23AXX9-F01	CP-23ZS001			
SHEET: 1 / 1	SCALE: 1 : 1	UNIT: mm	SIZE: A4	REV A/0
DRAWN: Xie Wenjun	CHECK: Long Jichang	DATE: 2025-03-28		