PIN数	4pin	5pin	6pin	7pin
图形	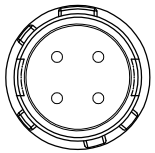	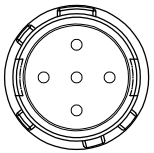	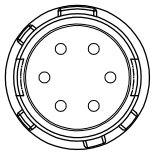	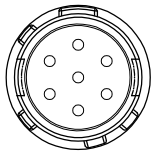

Recommended Panel Cut-out

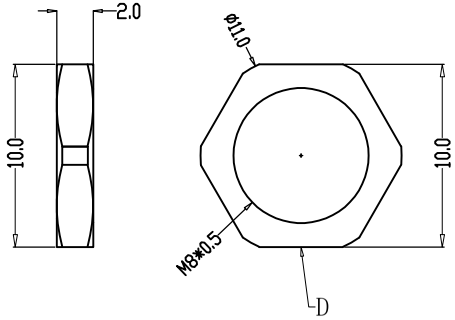

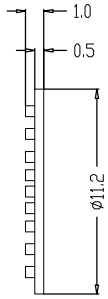

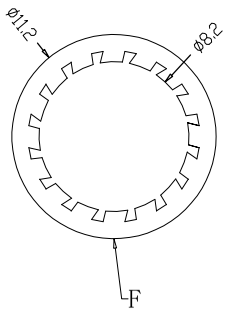

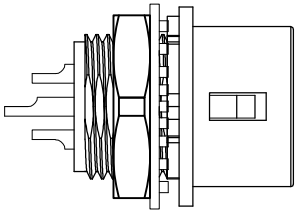

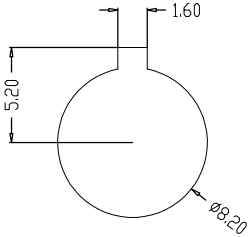

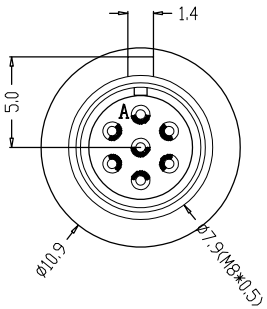

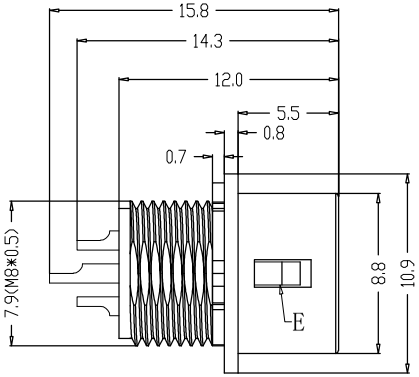

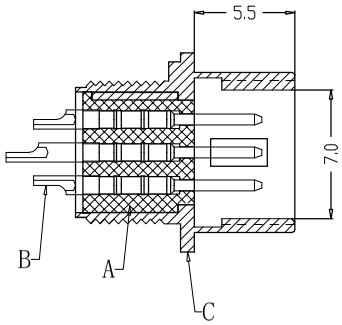

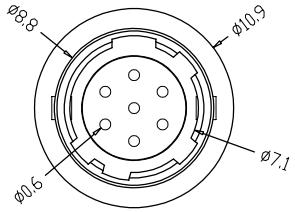

	PARTS	MATERIALS	TREATMENT	AMOUNT
A	HOUSING	PA66+GF	BLACK	1
B	CONTACT	BRASS	GOLD PLATED	4~7
C	SHELL	ZINC ALLOY	NICKL PLATED	1
D	NUT	BRASS	NICKL PLATED	1
E	SNAP FASTENER	BRASS	NICKL PLATED	1
F	ANTI-SLIP WASHER	SPCE-SD	NICKL PLATED	1
G				

Engagement force	≤20N	Rated volage	AC:100V DC:140V
Disengagement force	≥5N	Rated current	2A
Mechanical lifespan	≥1000	Insulation resistance	≥1000MΩ
IP rating	IP65	Contact resistance	≤10mΩ
Flammability	UL94 V-0	Operation Temperature	-25° C~85° C

Dongguan Changjun Electronics Co.,Ltd
东莞市昌骏电子有限公司

TOLERANCE
.xxx ±0.05
.xx ±0.10
.x ±0.30
x ±0.50
ANGLE ± 1°

TITLE: 推拉自锁HR10A线端公头 后锁面板式M8 F11T

PART NO:	DRAWING NO.:			
CJ-HR10A(4~7)-M01H-M8F11T	CP-HR10A0002			
SHEET: 1 / 1	SCALE: 1 : 1	UNIT: mm	SIZE: A4	REV A/0
DRAWN: Xie Wenjun	CHECK: Long Jichang	DATE: 2026-05-29		